PTSU Battery Pack.

Portable Traffic Light

DESIGNED BY madison Technologies

DATA SHEET

20Ah Rechargeable Lithium Iron Phosphate Smart Battery.

Part Number: T PTL1-BP-01

Battery

Nominal Voltage 12.8V
Nominal Capacity ..... @5hr Rate 20Ah
Watt-hour 256.0Wh
Internal Resistance ..... (at 1KHz) ≤ 40mΩ
Charge ..... @25°C
Standard Charge Current 4A
Maximum Charge Current 10A
Cut-off Voltage ..... 14.4V (14.6V max.)
Discharge ..... @25°C
Standard Discharge Current 4A
Max. Continuous Discharge 15A
Cut-off Voltage ..... 10.0V (9.6V min.)

Operating Temperature

Charge ..... 0 - +50°C
Discharge ..... -10 - +60°C
Storage ..... -10 - +40°C

Humidity ..... RH≤85%
Battery Case Material ..... ABS+PC
Termination ..... Deutsch 7 pin Connector
Cycles 2000

Protection

Overcharge protection, over discharge protection, over temperature protection, over current protection, balancing function

Built in protection

PTL Rechargeable Lithium batteries adhere to strict safety guidelines by incorporating Battery Management Systems (BMS) that include protection components.

Fuse
Thermistor
Protection Circuit Module (PCM)

Charger

Only use Lithium Ion Phosphate battery charger
Part number ..... T PTL1-BC-01
Input Voltage 240VAC
Output Voltage 12VDC/7A
Link to charging video ..... www.youtube.com/watch

Enclosure

Enclosure Material ..... Polycarbonate
Weight 3.5kg

Dimensions

Length 337mm
Width 222mm
Height 104mm

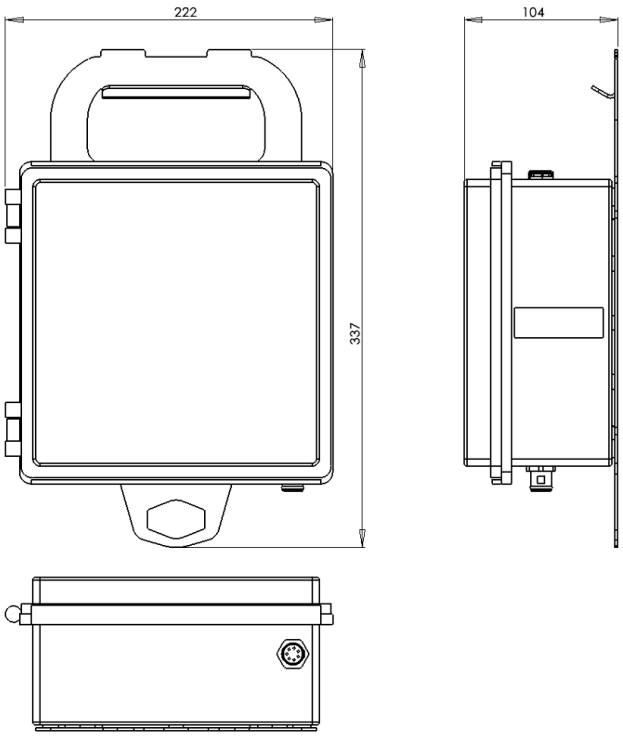

PTSU Battery Pack Specifications: 12.8V 20Ah.

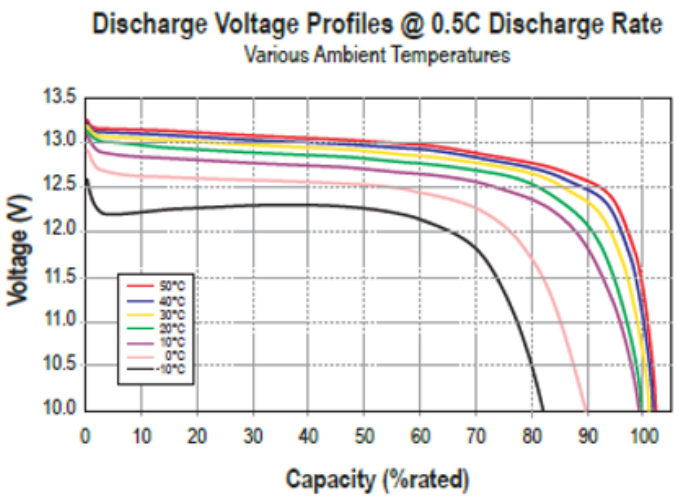

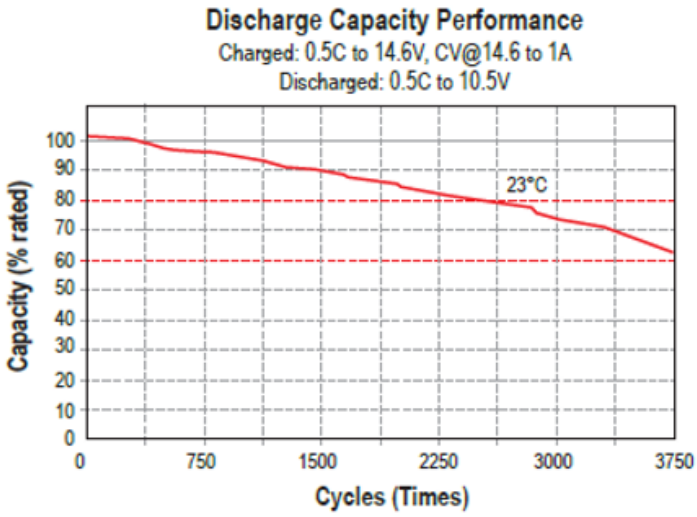

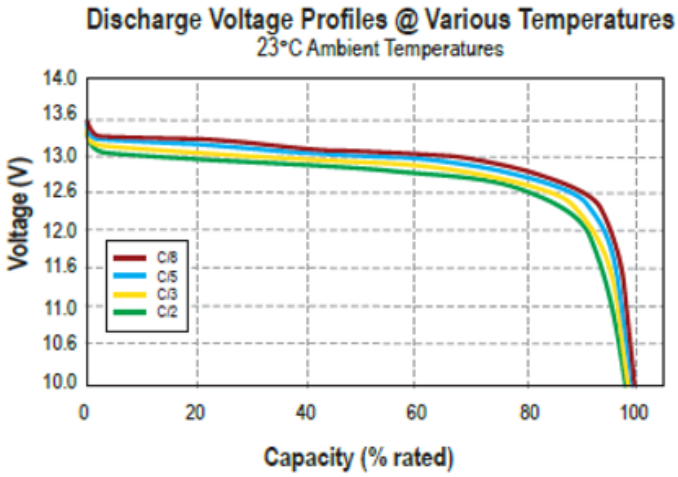

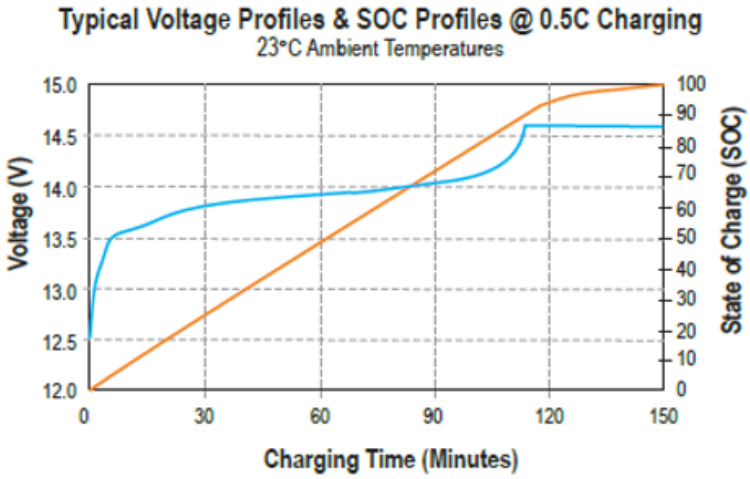

Transport Information for Lithium Battery

Battery Type	Lithium Iron Phosphate
Dangerous Goods Class	9
Hazchem	4W
UN38.3	Compliant
UN Number	3480
Air freight	Forbidden

Link to MSDS & shipping requirements	PTL Battery Pack
	PTL UN38.3 Report