NDE-8503-RXT Fixed dome 4MP HDR X 12-40mm PTRZ IP66

FLEXIDOME IP starlight 8000i

4MP H.265 HDR X IVA PTRZ

- Wireless or remote configuration and commissioning with the Project Assistant app. Pan, Tilt, Roll and Zoom (PTRZ) to set the camera to the required field of view, without having to touch the camera or lens
- Starlight X technology with 1/1.8" 4.1MP sensor for next level low-light performance with maximum detail
- HDR X - High Dynamic Range to see every detail in both bright and dark areas of the scene without HDR motion blur and artefacts
- Built-in Intelligent Video Analytics with object detection to trigger alerts and quickly retrieve data with the highest levels of reliability
- Camera Trainer to train the camera to recognize user-specified target objects for both moving and non-moving objects

The FLEXIDOME IP starlight 8000i - 4MP X series camera offers a 1/1.8" sensor, starlight X and HDR X technology at 4.1MP resolution. It provides the perfect balance between high resolution and extreme low-light sensitivity with starlight X technology, ensuring highly detailed images even in the most challenging situations.
HDR X enables the camera to capture video with a wide dynamic range across different light levels and without HDR motion blur and artefacts on moving objects. Fast moving objects are easily captured with frame rates of up to 60 frames per second at the same 4.1 MP resolution.
The camera's remote commissioning functionality makes sure installation and commissioning can be done in very little time. Using a PC or a mobile device with the Bosch Project Assistant app, you can pan, tilt, roll and zoom (PTRZ) and point the camera to the required field of view with a single click - without ever having to touch the camera or lens.

Functions

Full Remote Commissioning
Installing a professional IP video surveillance camera has never been so easy. In fact, as an installer, you'll never want to go back to the old methods of installing cameras again. We've simplified the installation and commissioning stages to such a degree that they can be done in very little time.
With the FLEXIDOME IP starlight 8000i camera's remote commissioning functionality there's no need to go up and down ladders. Using a PC or a mobile device with the Bosch Project Assistant app, you can pan, tilt, roll and zoom (PTRZ) and point the camera to the required field of view with a single click - without ever having to touch the camera or lens. Wireless or remote configuration and commissioning can also be done at a later stage once all cameras have been installed. Simply connect the Bosch Project Assistant app, available for iOS, Windows or Android,

wirelessly to the camera. Or connect to the camera remotely via the network using the camera's web interface or the Bosch Configuration Manager.

Fast performance
The 60 frames per second mode provides for optimum performance in fast action scenes and makes sure no critical data is lost. In combination with the high 4.1MP resolution, it allows for high detail video capture of fast moving objects while at the same time providing situational awareness.

Starlight X - Next level starlight performance
Starlight X technology combines the latest high performance, large pixel sensors, optics, improved image processing and noise suppression, resulting in a 5.5x improved sensitivity compared to the standard starlight camera.

HDR X - High Dynamic Range
HDR X is a new technology that combines unique sensor functionality and advanced algorithms. It is a huge leap forward in capturing high quality video of moving objects in scenes with a large dynamic range. It also allows HDR imaging at lower light levels in which traditional HDR technologies are non-functional. This is possible because the HDR X - Motion optimized mode takes two different readouts from one exposure to capture details in both the highlights and shadows of the scene, instead of blending multiple exposures like standard HDR technologies. Blending multiple exposures reduces sharpness and creates unwanted imaging artefacts on moving objects. HDR X resolves these issues, providing a crisp image with improved dynamic range.
In case an even larger dynamic range is required, HDR X - Optimized DR or HDR X - Extreme DR will further increase performance to an absolute maximum by adding another fast exposure. This combines the benefits from HDR X - Motion optimized and traditional HDR.

Scene modes
Nine configurable modes are provided with the best settings for a variety of applications. In one click fully optimized image settings can be selected to suit the conditions. Different scene modes can be selected for different situations such as traffic or retail environments.

Intelligent streaming
Smart encoding capabilities, together with Intelligent Dynamic Noise Reduction technology and analytics, reduce the bandwidth consumption to extremely low levels. Only relevant information in the scene, like motion, or objects found with the analytics, need to be encoded.
The camera is capable of quad streaming which allows the camera to deliver independent, configurable streams for live viewing, recording, or remote monitoring via constrained bandwidths.
Each of these streams can be adapted independently to deliver high quality video, perfectly tailored to purpose, while reducing bit rate by up to 90% compared to a standard camera.

H.265 high-efficiency video encoding
The camera is designed on the most efficient and powerful H.264 and H.265/HEVC encoding platform. The camera is capable of delivering high-quality and high-resolution video with very low network load. With a doubling of encoding efficiency, H.265 is the compression standard of choice for IP video surveillance systems.

Bitrate optimized profile
The average bitrate for the bitrate optimized profile using H.265 encoding in kbps for different frame rates can be found in the table provided below.

FPS at 4.1MP	Low activity	Medium activity	High activity
60	1287	1765	4239
30	776	1054	2536
25	680	1124	2218
15	471	710	1528
10	352	534	1140
5	215	329	693
3	150	231	482
1	70	108	222

Notice

Actual bitrate values may vary depending on scene complexity/activity and picture settings.

Recording and storage management
Recording management can be controlled by the Bosch Video Recording Manager application, or the camera can use local storage and iSCSI targets directly without any recording software.
Local storage can be used for recording "at the edge" or for Automatic Network Replenishment (ANR) technology to improve the overall recording reliability. Pre-alarm recording in RAM reduces bandwidth consumption on the network and extends the effective life of the memory card.

Advanced edge recording
Advanced edge recording provides the most reliable storage solution possible due to the combination of the following functionalities:

- Dual SD cards that can be set up as either:
  - Mirrored, for redundant storage
  - Failover, for extended service intervals

  - Extended, for maximum retention time
- Industrial SD card support allows for extreme lifetime
- Health monitoring of industrial SD cards provide early service indications

Intelligent Video Analytics on the edge
The camera includes the latest release of the Intelligent Video Analytics application from Bosch. Specifically designed for the most demanding environments. It delivers the highest levels of accuracy for mission-critical applications such as perimeter protection of airports, critical infrastructures and government buildings, border patrol, ship tracking and traffic monitoring (e.g. wrong-way detection, traffic counts, monitoring roadsides for parked cars).
Intelligent Video Analytics is extremely resistant to false triggers caused by challenging environments with snow, wind (moving trees), rain, hail, and water reflections. It is ideal for providing automatic object detection over large distances.
The set-up of Bosch's video analytics is also second to none, which is great news for installers. Should your customer decide to use Intelligent Video Analytics, configuration and calibration couldn't be easier. Simply enter the height of the camera and the rest of the calibration is carried out by the video analytics itself based on information provided by the camera's built-in gyro sensor.

Camera Trainer
Based on examples of target objects and non-target objects, the Camera Trainer program uses machine learning to allow the user to define objects of interest and generate detectors for them. In contrast to the moving objects that the Intelligent Video Analytics application detects, the Camera Trainer program detects both moving and non-moving objects and classifies them immediately. Using Configuration Manager, you can configure the Camera Trainer program using both live video as well as recordings available through the respective camera. The resulting detectors can be downloaded and uploaded for distribution to other cameras.
A free of charge license is required to activate the Camera Trainer program.

DORI coverage
DORI (Detect, Observe, Recognize, Identify) is a standard system (EN-62676-4) for defining the ability of a person viewing the video to distinguish persons or objects within a covered area. The maximum distance at which a camera/lens combination can meet these criteria is shown below:

4MP camera with 4.4 mm - 10 mm lens or 12 mm - 40 mm lens

DORI	DORI definition	Distance 4.4 mm / 10 mm	Distance 12 mm / 40 mm	Horizontal width
Detect	25 px/m 8 px/ft	38 m / 121 m 118 ft / 377 ft	162 m / 479 m 505 ft / 1498 ft	108 m 336 ft
Observe	63 px/m 19 px/ft	15 m / 48 m 50 ft / 159 ft	64 m / 190 m 213 ft / 631 ft	43 m 142 ft
Recognize	125 px/m 38 px/ft	8 m / 24 m 25 ft / 79 ft	32 m / 96 m 106 ft / 315 ft	22 m 71 ft
Identify	250 px/m 76 px/ft	4 m / 12 m 12 ft / 40 ft	16 m / 48 m 53 ft / 158 ft	11 m 35 ft

Data security
Special measures ensure the highest level of security for device access and data transport. On initial setup, the camera is only accessible over secure channels and enforces a password. Web browser and viewing client access can be protected using HTTPS or other secure protocols that support state-of-the-art TLS 1.2 with updated cipher suites including AES encryption with 256 bit keys. No software can be installed in the camera, and only authenticated firmware can be uploaded. A three-level password protection with security recommendations allows users to customize device access.
Network and device access can be protected using 802.1x network authentication with EAP/TLS.
Superior protection from malicious attacks is guaranteed by the Embedded Login Firewall, on-board Trusted Platform Module (TPM) and Public Key Infrastructure (PKI) support.
The advanced certificate handling offers:
- Self-signed unique certificates automatically created when required
- Client and server certificates for authentication
- Client certificates for proof of authenticity
- Certificates with encrypted private keys

System integration and ONVIF conformance
The camera conforms to the ONVIF Profile S, ONVIF Profile G, ONVIF Profile M, and ONVIF Profile T specifications. For H.265 configuration, the camera supports Media Service 2, which is part of ONVIF Profile T. Compliance with these standards guarantees interoperability between network video products regardless of manufacturer.

Third-party integrators can easily access the internal feature set of the camera for integration into large projects. Visit the Bosch Integration Partner Program (IPP) website (ipp.boschsecurity.com) for more information.

Universal accessories
A full line of universal accessories are available that allow a consistent design across different platforms and a wide range of installation possibilities. Several dedicated accessories are available that seamlessly fit to the camera and expand the different installation options over previous generations. Available options include: a paintable cover, an on-camera weather protector, a clear or tinted replacement bubble, in-ceiling mounting kits, a surveillance cabinet with power and fiber optic options and different mounting options.

Regulatory information

Standards	Type
Emission	EN 300 328, EN 62311, EN 50121-4 (EN 55016-2-1, EN 61000-4-2, EN 61000-4-3, EN 61000-4-4, EN 61000-4-5, EN 61000-4-6), ISED RSS-247, ISED RSS-GEN, CFR 47 FCC, part 15.247, 15.205, 15.207, 15.209, Class B, AS/NZS CISPR 32
Immunity	EN 301 489-1, EN 301 489-3, EN 301 489-17, EN 50130-4 (EN 61000-4-2, EN 61000-4-3, EN 61000-4-4, EN 61000-4-5, EN 61000-4-6), EN 50121-4 (EN 55016-2-1, EN 61000-4-2, EN 61000-4-3, EN 61000-4-4, EN 61000-4-5, EN 61000-4-6)
Environmental	EN 50130-5 Class IVA (EN 60068-2-2, EN 60068-2-5, EN 60068-2-6, EN 60068-2-18, EN 60068-2-27, EN 60068-2-30, EN 60068-2-42, EN 60068-2-52, EN 60068-2-75, EN 60068-2-78, EN 60529), UL 2043 when combined with NDA-8001-PLEN, Nema TS 2 Section 2
Safety	EN 62368-1, EN 60950-22, UL 62368-1, UL 60950-22, CSA C22.2 No. 62368-1-14, CAN/CSA-C22.2 No. 60950-22:07
Image performance	IEC 62676-5
HD	SMPTE 296M-2001 (Resolution: 1280x720)
	SMPTE 274M-2008 (Resolution: 1920x1080)
Color representation	ITU-R BT.709-6
ONVIF conformance	EN 50132-5-2, EN 62676-2
Impact protection	EN 62262 (IK10)
Water/dust protection	EN 60529 (IP66), ISO 20653 (IP6K9K), UL50E (Type 4X), UL 60950-22

Standards	Type
Environment	2011/65/EU RoHS (EN 50581 and EN IEC 63000), 1999/45/EC and 1907/2006 REACH, 2012/19/EU WEEE, 94/62/EC Packaging
Marks	CE, cULus, WEEE, RCM, EAC, China RoHS, Cmim, BIS, NOM, ANRT, KCC, Anatel, ICASA, TRA, BSMI, NCC

Installation/configuration notes

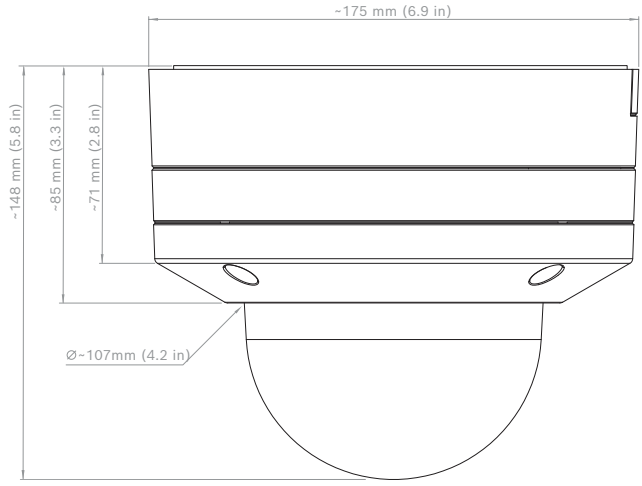

Parts included

Quantity	Component
1	FLEXIDOME IP 8000i camera
1	T-20 security Torx bit
1	Quick installation guide
1	Safety information
2	Rubber grommet for the Ethernet cable
1	Network patch cable 50 cm
1	10-pin I/O connector
1	2-pin power connector
1	Cable conduit for side entry
1	Washer for cable conduit
1	Adapter plate for cable conduit (Ø 3/4" / M25)
1	Adapter plate for cable conduit (Ø 1/2" / M20)
3	Identification label

Technical specifications

Power	
Input voltage	PoE IEEE 802.3af / 802.3at Type 1, Class 3; 24 VAC ±10%; 12-26 VDC ±10%; PoE and auxiliary power can be connected simultaneously for redundant operation
Power Consumption (typical / maximum)	PoE: 7 W / 12.95 W; 24 VAC: 7.1 W - 12 VA / 13 W - 25 VA; 12-26 VDC: 7.5 W / 16 W

Sensor	
Sensor type	1/1.8-inch CMOS
Effective pixels	2688 x 1520 2.9 µm pixels, 4.1MP (approx.)

Starlight sensitivity (12 to 40 mm lens)	
Measured according to IEC 62676 Part 5 (1/25, F2.3)	
Color	TBD lx
Mono	TBD lx

Dynamic range	
Dynamic range (WDR)	HDR X 144 dB
Measured according to IEC 62676 Part 5	108 dB WDR

Optical (12 to 40 mm lens)	
Lens	12 to 40 mm P-iris lens (IR corrected) F-stop 2.3 - 2.3
Adjustment	Motorized zoom/focus
Iris control	P-iris control
Viewing angle	Wide: 36.8° x 20.3° (H x V) Tele: 12.8° x 7.3° (H x V)

Platform	
Common product platform	CPP7.3

Video streaming	
Video compression	H.265; H.264; M- JPEG
Sensor modes	25 fps, HDR X, 2688 x 1520 (4.1 MP); 30 fps, HDR X, 2688 x 1520 (4.1 MP); 50 fps, 2688 x 1520 (4.1 MP); 60 fps, 2688 x 1520 (4.1 MP)

Video streaming	
Streaming	Multiple configurable streams in H.264, H.265 and M-JPEG, configurable frame rate and bandwidth. Regions of Interest (ROI); Bosch Intelligent Streaming
Camera latency	67 ms (60 fps)
GOP structure	IBBP
Frame rate	1-60 fps
Signal-to-Noise Ratio (SNR)	>55 dB

Video resolution (H x V)	
4.1 MP	2688 x 1520
2.8 MP (4:3)	1920 x 1440
1080p HD	1920 x 1080
1.3 MP (5:4)	1280 x 1024
720p HD	1280 x 720
480p SD	854 x 480
SD 4:3 (cropped)	704 x 480

Camera installation	
Mirror image	On / Off
Rotate	0° / 90° upright / 180° / 270° upright
Camera LED	Auto disable/Enable/Disable
Positioning	Coordinates / Mounting height
Camera view wizard	Motorized pan, tilt, roll, zoom, autofocus
Wireless commissioning	IEEE 802.11b/g/n

Video functions - color	
Adjustable picture settings	Contrast, Saturation, Brightness
White Balance	2500 to 10000K, 4 automatic modes (Basic, Standard, Sodium lamp, Dominant color), Manual mode and Hold mode

Video functions - ALC	
ALC level	Adjustable

Video functions - ALC	
Saturation	Adjustable from peak to average
Shutter	Automatic Electronic Shutter (AES); Fixed shutter (1/25[30] to 1/15000) selectable; Default shutter
Day/Night	Auto (adjustable switch points), Color, Monochrome

Video functions - enhance	
Sharpness	Sharpness enhancement level selectable
Backlight compensation	On/off
Contrast enhancement	On/off
Noise reduction	Intelligent Dynamic Noise Reduction with separate temporal and spatial adjustments
Intelligent defog	Intelligent Defog automatically adjusts parameters for best picture in foggy or misty scenes (switchable)

Video content analysis	
Analysis type	Intelligent Video Analytics, Camera Trainer
Configurations	Silent VCA / Profile1/2 / Scheduled / Event triggered
Alarm rules (combinable)	Any object, Object in field, Line crossing, Enter / leave field, Loitering, Follow route, Idle / removed object, Counting, Occupancy, Crowd density estimation, Condition change, Similarity search, Flow / counter flow
Object filters	Duration, Size, Aspect ratio, Speed, Direction, Color, Object classes (4)
Tracking modes	Standard (2D) tracking, 3D tracking, 3D people tracking, Ship tracking, Museum mode
Calibration / Geolocation	Automatic, based on gyro sensor, focal length and camera height
Tamper detection	Maskable

Additional functionalities	Tamper detection, Face detection

Additional functions	
Scene modes	10 default modes with scheduler: Indoor, Outdoor, Traffic, Night Optimized, Intelligent AE, Vibrant, Low bitrate, Sports & Gaming, Retail, License Plate Recognition (LPR)

Additional functions	
Privacy Masking	Eight independent areas, fully programmable
Face detection	Image posting
Display stamping	Name; Logo; Time; Alarm message
Pixel counter	Selectable area

Local storage	
Internal RAM	5 s pre-alarm recording
Memory card slots	Dual SDXC / SDHC / SD card slots.
Dual SD-card slot configurations	• Mirror (redundant storage) • Failover (extended service interval) • Extend (maximum retention time) • Automatic Network Replenishment
Industrial SD cards	Extreme lifetime and health monitoring support that provides early service indication.

Input/output	
Power output	+12 VDC, max 50 mA
Audio signal line in	10 kOhm typical; 1 Vrms max
Audio signal line out	1 Vrms; 1.5 kOhm typical
Alarm input	2 supervised inputs, dry contact or voltage operated (5 - 40 VDC); 2.2K end-of-line resistor
Alarm output	1 output, maximum: 30 VAC or +40 VDC, 0.5 A continuous, 10 VA
Ethernet	Shielded RJ45
Surge protection	Ethernet: 1 kV, 2 kA to ground (8/20 µs pulse)
Fiber optics (sold separately)	The Fiber Optic Ethernet Media Converter kit (VG4-SFPSCKT) installed inside a Surveillance Cabinet (NDA-U-PA0, NDA-U-PA1 or NDA-U-PA2) provides the fiber optic interface to the mounted camera.

Audio streaming	
Standard	G.711, 8 kHz sampling rate L16, 16 kHz sampling rate AAC-LC, 48 kbps at 16 kHz sampling rate AAC-LC, 80 kbps at 16 kHz sampling rate
Signal-to-Noise Ratio	>50 dB

Audio streaming	
Audio Streaming	Full-duplex / half duplex

Network	
Protocols	IPv4, IPv6, UDP, TCP, HTTP, HTTPS, RTP/RTCP, IGMP V2/V3, ICMP, ICMPv6, RTSP, FTP, ARP, DHCP, APIPA (Auto-IP, link local address), NTP (SNTP), SNMP (V1, V3, MIB-II), 802.1x, DNS, DNSv6, DDNS (DynDNS.org, selfHOST.de, no-ip.com), SMTP, iSCSI, UPnP (SSDP), DiffServ (QoS), LLDP, SOAP, Dropbox™, CHAP, digest authentication
Ethernet	10/100 Base-T
Interoperability	ONVIF Profile S, ONVIF Profile G, ONVIF Profile T, ONVIF Profile M

Data security	
Crypto Coprocessor (TPM)	RSA 2048 bit, AES/CBC 256 bit
PKI	X.509 certificates
Encryption	Full end-to-end encryption with supported VMS Network: TLS1.0/1.2, AES128, AES256 Local storage: XTS-AES
Video authentication	checksum, MD5, SHA-1, SHA-256

Mechanical	
Dimensions (D x H)	175 x 148 mm (6.9 x 5.7 in)
Weight	2.3 kg (5.07 lbs)
Mounting	Surface mount
Color	White (RAL9003)
Motorized PTR range	Pan: 0º to +361º; Tilt: -3º to +85º (NDE-8503-R), -3º to +90º (NDE-8503-RT); Roll: -95º to +95º
Dome bubble	Polycarbonate, clear with UV blocking anti-scratch coating
Housing	Aluminum with dehumidifying membranes and waterproof connection area

Environmental	
Operating temperature	-50 °C to +60 °C (-58 °F to +140 °F) for continuous operation;

Environmental	
	Up to +74 °C (+165 °F) according to NEMA TS 2-2003 (R2008), para 2.1.5.1 using fig. 2.1 test profile
Storage temperature	-30 °C to +70 °C (-22 °F to +158 °F)
Operating humidity	5% to 93% RH non condensing 5% to 100% RH condensing
Storage humidity	Up to 98% RH
Impact resistance casing and dome	IK10+ (50 joules)
Water/dust protection	IP66, IP6K9K and NEMA Type 4X

Ordering information

NDE-8503-RXT Fixed dome 4MP HDR X 12-40mm PTRZ IP66
Fixed dome with wireless commissioning and with tele lens. Made to order. Contact your Bosch sales dealer for availability.
Order number **NDE-8503-RXT | F.01U.385.214**

Accessories

NDA-8000-PC Paintable cover, 4 pcs
Paintable cover (4 pieces) for FLEXIDOME IP 8000i.
Order number **NDA-8000-PC | F.01U.324.966**

NDA-8000-CBL Clear replacement bubble
Clear replacement bubble.
Order number **NDA-8000-CBL | F.01U.324.934**

NDA-8000-TBL Tinted Bubble
Tinted bubble for FLEXIDOME IP 8000i.
Order number **NDA-8000-TBL | F.01U.324.973**

NDA-8001-IC In-ceiling mount kit
In-ceiling mount kit for FLEXIDOME IP 8000i with microphone support
Order number **NDA-8001-IC | F.01U.398.407**

NDA-8001-PLEN Plenum-rated mount kit
Plenum-rated in-ceiling mount kit for FLEXIDOME IP 8000i with microphone support
Order number **NDA-8001-PLEN | F.01U.398.393**

NDA-8000-SP In-ceiling mount support kit
Soft ceiling support for in-ceiling mount kit for FLEXIDOME IP 8000i.
Order number **NDA-8000-SP | F.01U.324.937**

NDA-8000-WP On-camera weather protector
On-camera weather protector for FLEXIDOME IP 8000i.
Order number **NDA-8000-WP | F.01U.324.929**

NDA-8000-PIP Pendant interface plate, indoor
Pendant interface plate for FLEXIDOME IP 8000i and FLEXIDOME IP panoramic 6000/7000 outdoor.
Order number **NDA-8000-PIP | F.01U.324.938**

NDA-8000-PIPW Pendant interface plate, outdoor
Pendant interface plate including weather protector for FLEXIDOME IP 8000i and FLEXIDOME IP panoramic 6000/7000 outdoor.
Order number **NDA-8000-PIPW | F.01U.324.967**

NDA-U-WMT Pendant wall mount
Universal wall mount for dome cameras, white
Order number **NDA-U-WMT | F.01U.324.939**

NDA-U-PMT Pendant pipe mount, 12" (31cm)
Universal pipe mount for dome cameras, 31 cm, white
Order number **NDA-U-PMT | F.01U.324.940**

NDA-U-PMTS Pendant pipe mount, 4" (11 cm)
Universal pendant pipe mount for dome cameras, 11 cm (4"), white
Order number **NDA-U-PMTS | F.01U.385.046**

NDA-U-PMTE Pendant pipe extension, 20" (50cm)
Extension for universal pipe mount, 50 cm, white
Order number **NDA-U-PMTE | F.01U.324.941**

NDA-U-PSMB Pendant wall/ceiling mount SMB
Surface mount box (SMB) for wall mount or pipe mount.
Order number **NDA-U-PSMB | F.01U.324.942**

NDA-U-PA0 Surveillance cabinet 24VAC
Surveillance cabinet, 24 VAC input, 24 VAC output, IP66
Order number **NDA-U-PA0 | F.01U.324.947**

NDA-U-PA1 Surveillance cabinet 120VAC
Surveillance cabinet, 100 - 120 VAC 50/60 Hz input, 24 VAC output, IP66
Order number **NDA-U-PA1 | F.01U.324.948**

NDA-U-PA2 Surveillance cabinet 230VAC
Surveillance cabinet, 230 VAC input, 24 VAC output, IP66
Order number **NDA-U-PA2 | F.01U.324.949**

NDA-U-PMAL Pole mount adapter large
Universal pole mount adapter, white; large
Order number **NDA-U-PMAL | F.01U.324.944**

NDA-U-PMAS Pole mount adapter small
Pole mount adapter small
Universal pole mount adapter, white; small.
Order number **NDA-U-PMAS | F.01U.324.943**

NDA-U-RMT Pendant parapet mount
Universal roof mount for dome cameras, white
Order number **NDA-U-RMT | F.01U.324.945**

NDA-U-WMTG Pendant wall mount, gang box
Universal wall mount, compatible with gang box installation for fixed dome cameras only, white
Order number **NDA-U-WMTG | F.01U.358.358**

NDA-U-PMTG Pendant pipe mount, gang box
Universal pipe mount, compatible with gang box installation for fixed dome cameras only, white
Order number **NDA-U-PMTG | F.01U.358.359**

VG4-SFPSCKT Ethernet to SFP interface kit
Ethernet media converter video transmitter/data receiver fiber optic kit for AUTODOME cameras, for MIC-IP-PSU for MIC analog cameras and for the Surveillance cabinets (NDA-U-PA0, NDA-U-PA1 and NDA-U-PA2).
Order number **VG4-SFPSCKT | F.01U.142.529**

SFP-2 Fiber module, multimode, 1310nm, 2LC
SFP Fiber Optic Module, 2 km (1.2 miles), 2 LC connectors.
Multi-mode
1310 mm
Order number **SFP-2 | F.01U.136.537**

SFP-3 Fiber module, single-mode, 1310nm, 2LC
SFP Fiber Optic Module, 20 km (12.4 miles), 2 LC connectors.
Single-mode
1310 nm
Order number **SFP-3 | F.01U.136.538**

SFP-25 Fiber module, 1310/1550nm, 1SC
SFP Fiber Optic Module, 2 km (1.2 miles), 1 SC connector
Multi-mode
1310/1550 nm
Order number **SFP-25 | F.01U.136.541**

SFP-26 Fiber module, 1550/1310nm, 1SC
SFP Fiber Optic Module, 2 km (1.2 miles), 1 SC connector
Multi-mode
1550/1310 nm
Order number **SFP-26 | F.01U.136.542**

Services

EWE-FDIP8I-IW 12 mths wrty ext FD IP 8000i
12 months warranty extension
Order number **EWE-FDIP8I-IW | F.01U.380.691**

Represented by:

Europe, Middle East, Africa:
Bosch Security Systems B.V.
P.O. Box 80002
5600 JB Eindhoven, The Netherlands
Phone: + 31 40 2577 284
www.boschsecurity.com/xc/en/contact/
www.boschsecurity.com

Germany:
Bosch Sicherheitssysteme GmbH
Robert-Bosch-Ring 5
85630 Grasbrunn
Tel.: +49 (0)89 6290 0
Fax:+49 (0)89 6290 1020
de.securitysystems@bosch.com
www.boschsecurity.com

North America:
Bosch Security Systems, LLC
130 Perinton Parkway
Fairport, New York, 14450, USA
Phone: +1 800 289 0096
Fax: +1 585 223 9180
onlinehelp@us.bosch.com
www.boschsecurity.com

Asia-Pacific:
Robert Bosch (SEA) Pte Ltd, Security Systems
11 Bishan Street 21
Singapore 573943
Phone: +65 6571 2808
Fax: +65 6571 2699
www.boschsecurity.com/xc/en/contact/
www.boschsecurity.com

© Bosch Security Systems 2022